STATE OF VERMONT
AGENCY OF TRANSPORTATION

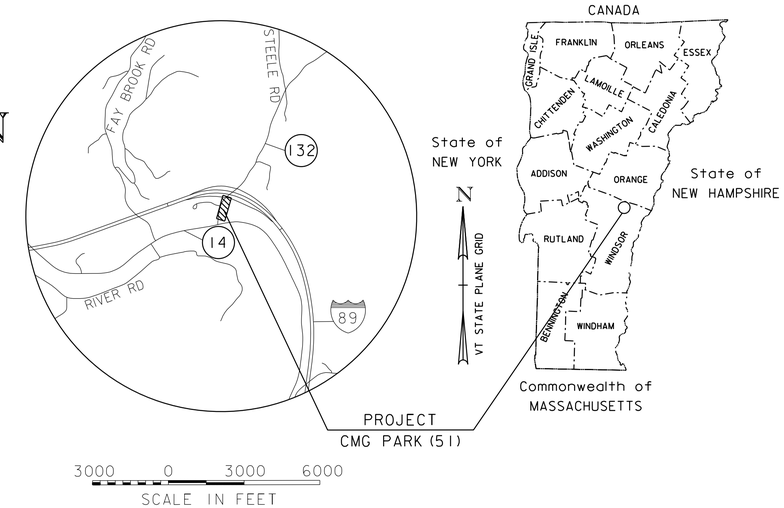

PROPOSED IMPROVEMENT
TOWN OF SHARON
COUNTY OF WINDSOR
PARK AND RIDE LOT

THIS PROJECT IS LOCATED IN THE TOWN OF SHARON ON VT ROUTE 132, AT APPROXIMATELY 225 FEET FROM THE INTERSECTION OF VT ROUTE 132 AND INTERSTATE 89.

WORK TO BE PERFORMED UNDER THIS PROJECT INCLUDES THE RECONSTRUCTION AND EXPANSION OF THE EXISTING PARK AND RIDE FACILITY, PAVEMENT OVERLAY, NEW SIDEWALK, PAVEMENT MARKINGS, NEW SIGNAGE, NEW DRAINAGE, LANDSCAPING, LIGHTING, NEW BUS SHELTER, AND OTHER INCIDENTAL ITEMS.

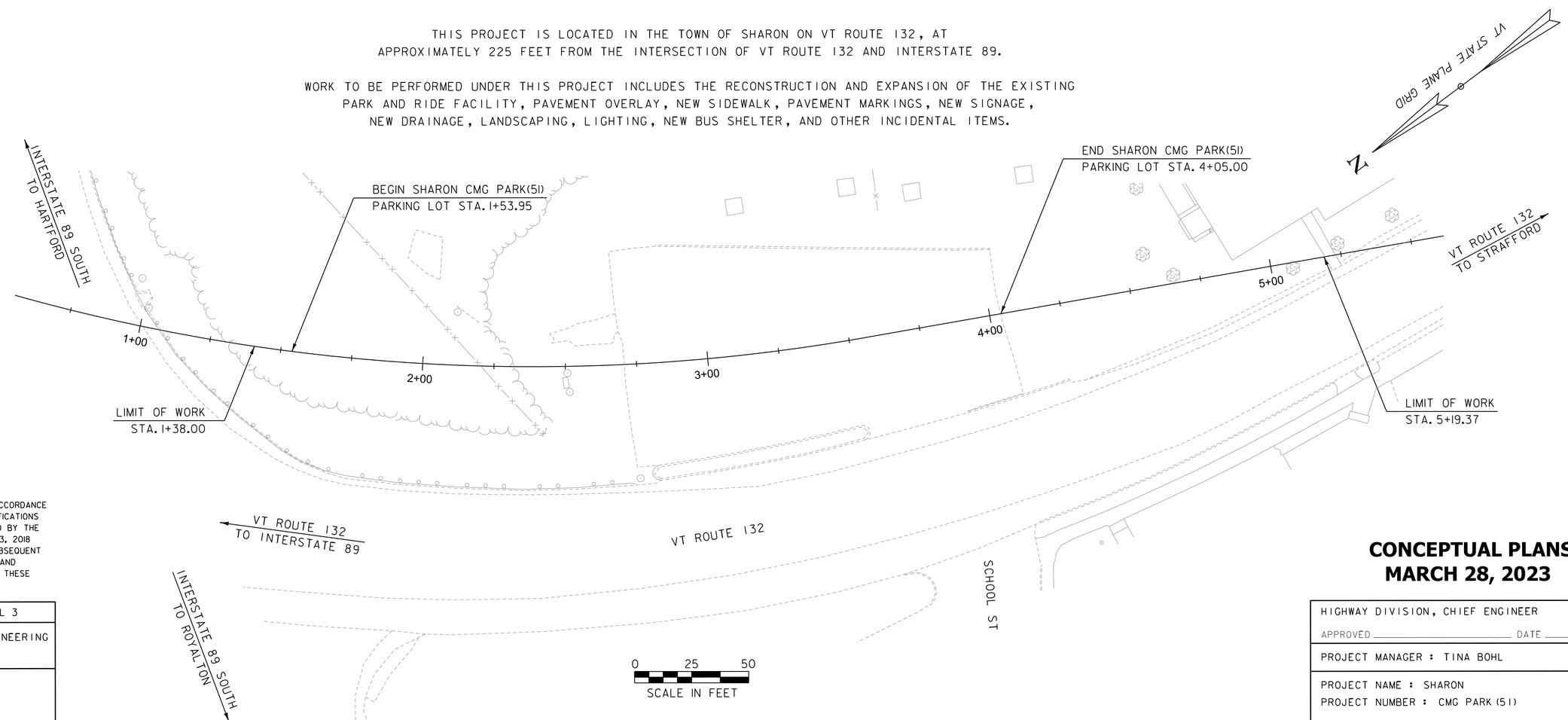

CONSTRUCTION IS TO BE CARRIED ON IN ACCORDANCE WITH THESE PLANS AND THE STANDARD SPECIFICATIONS FOR CONSTRUCTION DATED 2018, AS APPROVED BY THE FEDERAL HIGHWAY ADMINISTRATION ON APRIL 13, 2018 FOR USE ON THIS PROJECT, INCLUDING ALL SUBSEQUENT REVISIONS AND SUCH REVISED SPECIFICATIONS AND SPECIAL PROVISIONS AS ARE INCORPORATED IN THESE PLANS.

QUALITY ASSURANCE PROGRAM : LEVEL 3

SURVEYED BY : VT SURVEY & ENGINEERING
SURVEYED DATE : 12/08/2022

DATUM
VERTICAL NAVD88
HORIZONTAL NAD83 (2011)

CONCEPTUAL PLANS
MARCH 28, 2023

HIGHWAY DIVISION, CHIEF ENGINEER
APPROVED _____ DATE _____

PROJECT MANAGER : TINA BOHL

PROJECT NAME : SHARON
PROJECT NUMBER : CMG PARK (51)

SHEET 1 OF 15 SHEETS

INDEX OF SHEETS

1.	TITLE SHEET
2.	INDEX OF SHEETS
3.	CONVENTIONAL SYMBOLOGY LEGEND SHEET
4.	TYPICAL SECTIONS SHEET
5.	DETAIL SHEET
6.	PLAN SHEET
7.	PROFILE SHEET
8.	TRAFFIC SIGNS AND PAVEMENT MARKING SHEET
9.	LIGHTING AND LANDSCAPE DESIGN SHEET
10-11.	DETOUR PLAN SHEETS
12.	OFFSITE PARKING PLAN SHEET
13-15.	CROSS SECTIONS SHEETS

MUNICIPAL ASSISTANCE BUREAU DETAIL SHEETS

MAB-522.01A	BUS SHELTER DETAILS	09/27/2018
MAB-522.01B	BUS SHELTER DETAILS	09/27/2018
MAB-522.01C	BUS SHELTER DETAILS	09/27/2018
MAB-522.01D	BUS SHELTER DETAILS	09/27/2018

VTRANS STANDARDS

B-5	SLOPE GRADING, EMBANKMENTS, MUCK	06/01/1994
C-3A	SIDEWALK RAMPS	04/07/2020
C-10	CURBING	02/11/2008
D-4	VARIOUS DRAINAGE DETAILS	08/13/2007
D-16	DRAINAGE DETAILS INCLUDING DROP INLETS, IRON GRATE TYPE B&C, CONC END SECTIONS. ETC.	06/01/1994
D-30	UNDERDRAIN CONSTRUCTION DETAILS	08/13/2007
E-1	TREE PLANTING	07/11/2017
E-2	SHRUB PLANTING	07/11/2017
E-10	ROLLED EROSION CONTROL PRODUCT, TYPE 1	04/07/2020
E-11	CHECK DAM, TYPE 1	04/07/2020
E-12	STABILIZED CONSTRUCTION ENTRANCE	04/07/2020
E-13	INLET PROTECTION DEVICE, TYPE 1	
E-121	STANDARD SIGN PLACEMENT - CONVENTIONAL ROAD	08/08/1995
E-132	GENERAL MOTORIST SERVICE SIGN DETAILS	08/18/1995
E-145A	REGULATORY SIGN DETAILS - LANE USE CONTROL SIGNS	12/23/1994
E-146	REGULATORY SIGN DETAILS	09/20/1995
E-191	PAVEMENT MARKING DETAILS	02/01/1999
E-192	PAVEMENT MARKING DETAILS	10/12/2000
E-193	PAVEMENT MARKING DETAILS	08/18/1995
T-1	TRAFFIC CONTROL GENERAL NOTES	04/25/2016
T-2	TRAFFIC SIGN GENERAL NOTES	04/07/2020
T-10	CONVENTIONAL ROADS CONSTRUCTION APPROACH SIGNING	08/06/2012
T-17	TRAFFIC CONTROL MISCELLANEOUS DETAILS	08/06/2012
T-28	CONSTRUCTION SIGN DETAILS	08/06/2012
T-29	CONSTRUCTION SIGN DETAILS	08/06/2012
T-30	CONSTRUCTION SIGN DETAILS	08/06/2012
T-31	CONSTRUCTION SIGN DETAILS	08/06/2012
T-45	SQUARE TUBE SIGN POST AND ANCHOR	01/02/2013
T-56	STANDARD SIGN PLACEMENT	10/26/2015
T-133	LIGHT POLE FOUNDATION DETAILS	07/25/2016
T-134	LIGHT POLE & TRANSFORMER BASE DETAILS	03/10/2017

GREEN INTERNATIONAL AFFILIATES, INC.
CIVIL AND STRUCTURAL ENGINEERS

PROJECT NAME: SHARON
PROJECT NUMBER: CMG PARK(51)

FILE NAME: z22c160frm.dgn
PROJECT LEADER: D. VERTIYEV
DESIGNED BY: F. EISINGER
INDEX OF SHEETS

PLOT DATE: 3/28/2023
DRAWN BY: M. NOLAN
CHECKED BY: F. EISINGER
SHEET 2 OF 15

GENERAL INFORMATION

SYMBOLOGY LEGEND NOTE

THE SYMBOLOGY ON THIS SHEET IS INTENDED TO COVER STANDARD CONVENTIONAL SYMBOLOGY. THE SYMBOLOGY IS USED FOR EXISTING & PROPOSED FEATURES WITH HEAVIER LINEWEIGHT, IN COMBINATION WITH PROJECT ANNOTATION, AS NOTED ON PROJECT PLAN SHEETS. THIS LEGEND SHEET COVERS THE BASICS. SYMBOLOGY ON PLANS MAY VARY, PLAN ANNOTATIONS AND NOTES SHOULD BE USED TO CLARIFY AS NEEDED.

R.O.W. ABBREVIATIONS (CODES) & SYMBOLS

POINT	CODE	DESCRIPTION
	CH	CHANNEL EASEMENT
	CONST	CONSTRUCTION EASEMENT
	CUL	CULVERT EASEMENT
	D&C	DISCONNECT & CONNECT
	DIT	DITCH EASEMENT
	DR	DRAINAGE EASEMENT
	DRIVE	DRIVEWAY EASEMENT
	EC	EROSION CONTROL
	HWY	HIGHWAY EASEMENT
	I&M	INSTALL & MAINTAIN EASEMENT
	LAND	LANDSCAPE EASEMENT
	R&RES	REMOVE & RESET
	R&REP	REMOVE & REPLACE
	R.T.& I.	RIGHT, TITLE, AND INTEREST
	SR	SLOPE RIGHT
	UE	UTILITY EASEMENT
	(P)	PERMANENT EASEMENT
	(T)	TEMPORARY EASEMENT
■	BNDNS	BOUND SET
⊡	BNDNS	BOUND TO BE SET
◎	IPNF	IRON PIN FOUND
●	IPNS	IRON PIN TO BE SET
⊠	CALC	EXISTING ROW POINT
○	PROW	PROPOSED ROW POINT
[LENGTH]		LENGTH CARRIED ON NEXT SHEET

COMMON TOPOGRAPHIC POINT SYMBOLS

POINT	CODE	DESCRIPTION
	APL	BOUND APPARENT LOCATION
	BM	BENCHMARK
	BND	BOUND
	CB	CATCH BASIN
	COMB	COMBINATION POLE
	DITHR	DROP INLET THROATED DNC
	EL	ELECTRIC POWER POLE
	FPOLE	FLAGPOLE
	GASFIL	GAS FILLER
	GP	GUIDE POST
	GSO	GAS SHUT OFF
	GUY	GUY POLE
	GUYW	GUY WIRE
	GV	GATE VALVE
	H	TREE HARDWOOD
	HCTRL	CONTROL HORIZONTAL
	HVCTRL	CONTROL HORIZ. & VERTICAL
	HYD	HYDRANT
	IP	IRON PIN
	IPIPE	IRON PIPE
	LI	LIGHT - STREET OR YARD
	MB	MAILBOX
	MH	MANHOLE (MH)
	MM	MILE MARKER
	PM	PARKING METER
	PMK	PROJECT MARKER
	POST	POST STONE/WOOD
	RRSIG	RAILROAD SIGNAL
	RRSL	RAILROAD SWITCH LEVER
	S	TREE SOFTWOOD
	SAT	SATELLITE DISH
	SHRUB	SHRUB
	SIGN	SIGN
	STUMP	STUMP
	TEL	TELEPHONE POLE
	TIE	TIE
	TSIGN	SIGN W/DOUBLE POST
	VCTRL	CONTROL VERTICAL
	WELL	WELL
	WSO	WATER SHUT OFF

THESE ARE COMMON VAOT SURVEY POINT SYMBOLS FOR EXISTING FEATURES, ALSO USED FOR PROPOSED FEATURES WITH HEAVIER LINEWEIGHT, IN COMBINATION WITH PROPOSED ANNOTATION.

PROPOSED GEOMETRY CODES

CODE	DESCRIPTION
PC	POINT OF CURVATURE
PI	POINT OF INTERSECTION
CC	CENTER OF CURVE
PT	POINT OF TANGENCY
PCC	POINT OF COMPOUND CURVE
PRC	POINT OF REVERSE CURVE
POB	POINT OF BEGINNING
POE	POINT OF ENDING
STA	STATION PREFIX
AH	AHEAD STATION SUFFIX
BK	BACK STATION SUFFIX
D	CURVE DEGREE OF (100FT)
R	CURVE RADIUS OF
T	CURVE TANGENT LENGTH
L	CURVE LENGTH OF
E	CURVE EXTERNAL DISTANCE
CB	CHORD BEARING

UTILITY SYMBOLOGY

UNDERGROUND UTILITIES

UGU	UTILITY (GENERIC-UNKNOWN)
UT	TELEPHONE
UE	ELECTRIC
UC	CABLE (TV)
UEC	ELECTRIC+CABLE
UET	ELECTRIC+TELEPHONE
UCT	CABLE+TELEPHONE
UECT	ELECTRIC+CABLE+TELEPHONE
G	GAS LINE
W	WATER LINE
S	SANITARY SEWER (SEPTIC)

ABOVE GROUND UTILITIES (AERIAL)

AGU	UTILITY (GENERIC-UNKNOWN)
T	TELEPHONE
E	ELECTRIC
C	CABLE (TV)
EC	ELECTRIC+CABLE
ET	ELECTRIC+TELEPHONE
AER E&T	ELECTRIC+TELEPHONE
CT	CABLE+TELEPHONE
ECT	ELECTRIC+CABLE+TELEPHONE
	UTILITY POLE GUY WIRE

PROJECT CONSTRUCTION SYMBOLOGY

PROJECT DESIGN & LAYOUT SYMBOLOGY

CZ	CLEAR ZONE
	PLAN LAYOUT MATCHLINE

PROJECT CONSTRUCTION FEATURES

	TOP OF CUT SLOPE
	TOE OF FILL SLOPE
	STONE FILL
	BOTTOM OF DITCH ℄
	CULVERT PROPOSED
	STRUCTURE SUBSURFACE
PDF PDF	PROJECT DEMARCATION FENCE
BF BF	BARRIER FENCE
	TREE PROTECTION ZONE (TPZ)
	STRIPING LINE REMOVAL
	SHEET PILES

CONVENTIONAL BOUNDARY SYMBOLOGY

BOUNDARY LINES

TOWN LINE	TOWN BOUNDARY LINE
COUNTY LINE	COUNTY BOUNDARY LINE
STATE LINE	STATE BOUNDARY LINE
	PROPOSED STATE R.O.W. (LIMITED ACCESS)
	PROPOSED STATE R.O.W.
	STATE ROW (LIMITED ACCESS)
	STATE ROW
	TOWN ROW
	PERMANENT EASEMENT LINE (P)
	TEMPORARY EASEMENT LINE (T)
	SURVEY LINE
P L P L	PROPERTY LINE (P/L)
SR SR SR	SLOPE RIGHTS
6f 6f	6F PROPERTY BOUNDARY
4f 4f	4F PROPERTY BOUNDARY
HAZ HAZ	HAZARDOUS WASTE

EPSC LAYOUT PLAN SYMBOLOGY

EPSC MEASURES

	FILTER CURTAIN
	SILT FENCE
	SILT FENCE WOVEN WIRE
	CHECK DAM
	DISTURBED AREAS REQUIRING RE-VEGETATION
	EROSION MATTING

SEE EPSC DETAIL SHEETS FOR ADDITIONAL SYMBOLOGY

ENVIRONMENTAL RESOURCES

	WETLAND BOUNDARY
	RIPARIAN BUFFER ZONE
	WETLAND BUFFER ZONE
	SOIL TYPE BOUNDARY
T&E	THREATENED & ENDANGERED SPECIES
HAZ HAZ	HAZARDOUS WASTE AREA
AG	AGRICULTURAL LAND
HABITAT	FISH & WILDLIFE HABITAT
FLOOD PLAIN	FLOOD PLAIN
OHW	ORDINARY HIGH WATER (OHW)
	STORM WATER
	USDA FOREST SERVICE LANDS
	WILDLIFE HABITAT SUIT/CONN

ARCHEOLOGICAL & HISTORIC

ARCH	ARCHEOLOGICAL BOUNDARY
HISTORIC DIST	HISTORIC DISTRICT BOUNDARY
HISTORIC	HISTORIC AREA
H	HISTORIC STRUCTURE

CONVENTIONAL TOPOGRAPHIC SYMBOLOGY

EXISTING FEATURES

	ROAD EDGE PAVEMENT
	ROAD EDGE GRAVEL
	DRIVEWAY EDGE
	DITCH
	FOUNDATION
	FENCE (EXISTING)
	FENCE WOOD POST
	FENCE STEEL POST
	GARDEN
	ROAD GUARDRAIL
	RAILROAD TRACKS
	CULVERT (EXISTING)
	STONE WALL
	WALL
	WOOD LINE
	BRUSH LINE
	HEDGE
	BODY OF WATER EDGE
	LEDGE EXPOSED

GREEN INTERNATIONAL AFFILIATES, INC.
CIVIL AND STRUCTURAL ENGINEERS

PROJECT NAME: SHARON
PROJECT NUMBER: CMG PARK(51)

FILE NAME: z22cl60legend.dgn
PROJECT LEADER: D. VERTIYEV
DESIGNED BY: F. EISINGER
CONVENTIONAL SYMBOLOGY LEGEND SHEET

PLOT DATE: 3/28/2023
DRAWN BY: M. NOLAN
CHECKED BY: F. EISINGER
SHEET 3 OF 15

TYPICAL SECTIONS
SHARON PARK & RIDE

MATERIAL ITEM	THICKNESS TOLERANCE
PAVEMENT (TOTAL DEPTH ALL LAYERS)	+/- 1/4"
SUBBASE (TOTAL DEPTH ALL LAYERS)	+/- 1"
SAND BORROW (TOTAL DEPTH ALL LAYERS)	+/- 1"

PARK & RIDE EXIT, & PARKING LOT CONSTRUCTION
1 1/2" BITUMINOUS CONCRETE PAVEMENT (TYPE IVS) - WEARING COURSE OVER
3 1/2" BITUMINOUS CONCRETE PAVEMENT (TYPE IIS) - BASE COURSE OVER
3" SUBBASE OF CRUSHED GRAVEL, FINE GRADED OVER
12" SUBBASE OF DENSE GRADED CRUSHED STONE OVER
12" SAND BORROW

SIDEWALK CONSTRUCTION
PORTLAND CEMENT CONCRETE SIDEWALK, 5 INCH OVER
3" SUBBASE OF CRUSHED GRAVEL, FINE GRADED OVER
12" SUBBASE OF DENSE GRADED CRUSHED STONE OVER
12" SAND BORROW

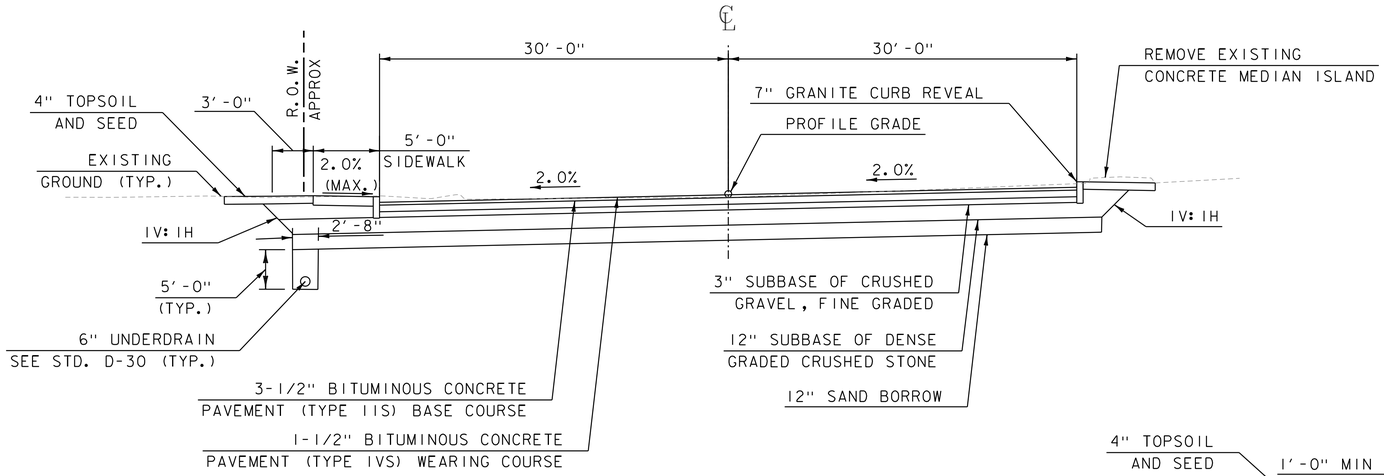

PARK & RIDE PARKING LOT - TYPICAL SECTION
STA. 3+05.00 TO STA. 4+05.00
NOT TO SCALE

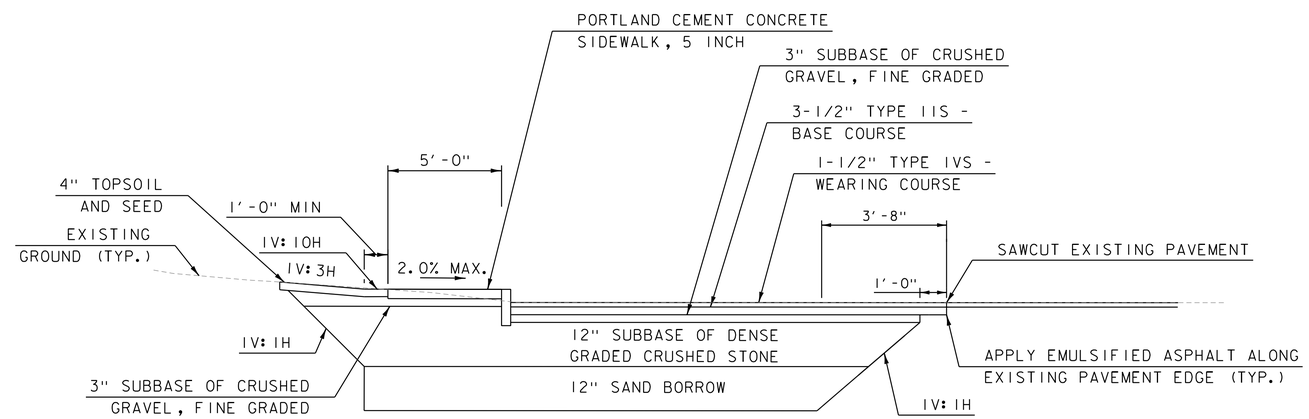

BOX WIDENING - TYPICAL SECTION
STA. 4+10.00 TO STA. 5+20.00
NOT TO SCALE

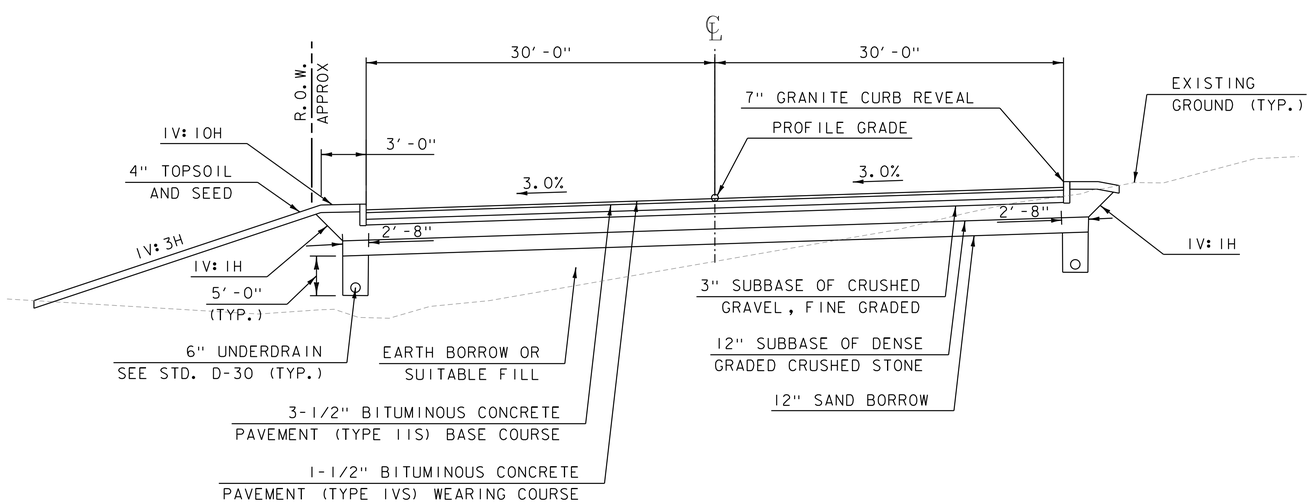

PARK & RIDE PARKING LOT - TYPICAL SECTION
STA. 1+53.95 TO STA 3+05.00
NOT TO SCALE

NOT TO SCALE

GREEN INTERNATIONAL AFFILIATES, INC.
CIVIL AND STRUCTURAL ENGINEERS

PROJECT NAME: SHARON	
PROJECT NUMBER: CMG PARK(51)	
FILE NAME: z22cl60typ.dgn	PLOT DATE: 3/28/2023
PROJECT LEADER: D. VERTIYEV	DRAWN BY: M. NOLAN
DESIGNED BY: F. EISINGER	CHECKED BY: F. EISINGER
TYPICAL SECTIONS SHEET	SHEET 4 OF 15

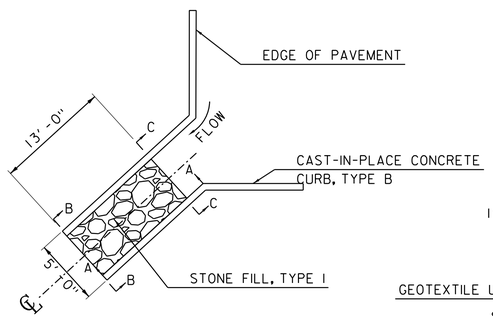

PLAN VIEW

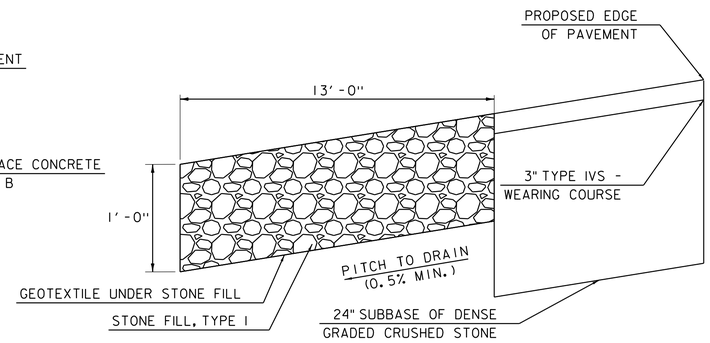

SECTION A-A

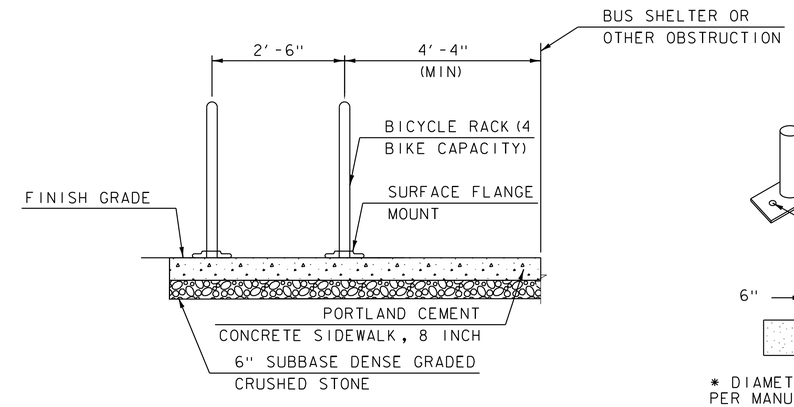

ELEV. VIEW

NOTE: BICYCLE RACK, SURFACE FLANGE MOUNT, AND LAG BOLTS TO BE PAID UNDER SPECIAL PROVISION (BICYCLE RACK).

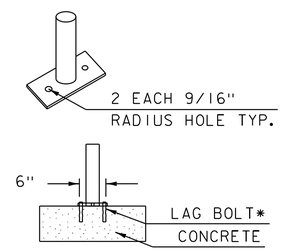

* DIAMETER, LENGTH & MATERIAL PER MANUFACTURER'S RECOMMENDATIONS

SURFACE FLANGE MOUNT DETAIL

NOT TO SCALE

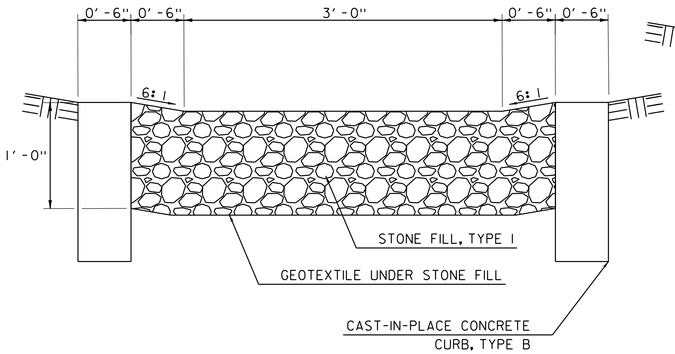

SECTION B-B

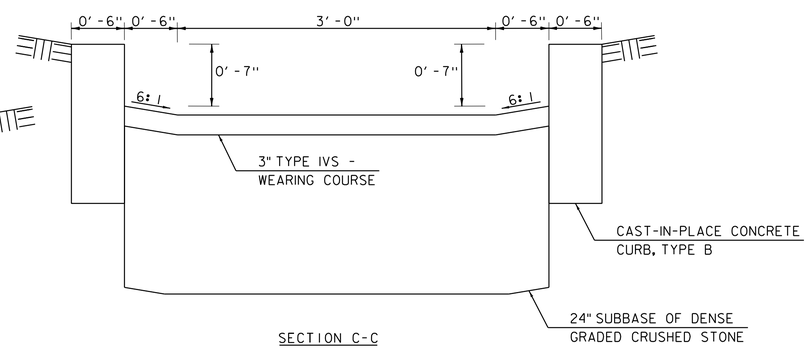

SECTION C-C

SPECIAL PROVISION (PAVED WATERWAY)

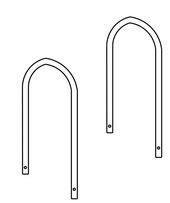

SIDE VIEW

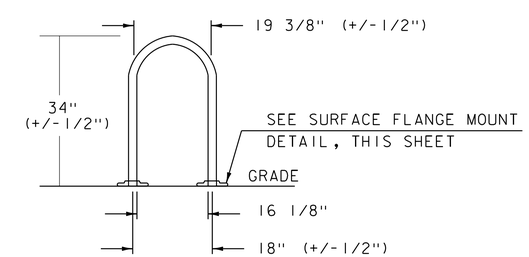

END VIEW

SPECIAL PROVISION (BICYCLE RACK)

NOT TO SCALE

GREEN INTERNATIONAL AFFILIATES, INC.
CIVIL AND STRUCTURAL ENGINEERS

PROJECT NAME: SHARON	
PROJECT NUMBER: CMG PARK(51)	
FILE NAME: z22cl60typ.dgn	PLOT DATE: 3/28/2023
PROJECT LEADER: D. VERTIYEV	DRAWN BY: M. NOLAN
DESIGNED BY: F. EISINGER	CHECKED BY: F. EISINGER
DETAIL SHEET	SHEET 5 OF 15

PORTLAND CEMENT SIDEWALK, 5 INCH
STA. 3+20 - 5+20 LT/RT

VERTICAL GRANITE CURB
STA. 1+54 - 5+21 LT/RT
STA. 1+54 - 3+72 RT

DETECTABLE WARNING SURFACE
STA. 3+12 LT
STA. 5+06 RT

30" CPEP (SL)
STA. 1+38 - 2+08 LT
STA. 2+12 LT/RT

6" UNDERDRAIN PIPE
STA. 1+70 - 3+75 LT
STA. 1+70 - 2+90 RT

SPECIAL PROVISION (BUS SHELTER)
STA. 4+34 RT

SPECIAL PROVISION (BICYCLE RACK)
STA. 4+23 RT

SPECIAL PROVISION (DISPOSAL OF EXISTING BICYCLE RACK)
STA. 2+50 RT

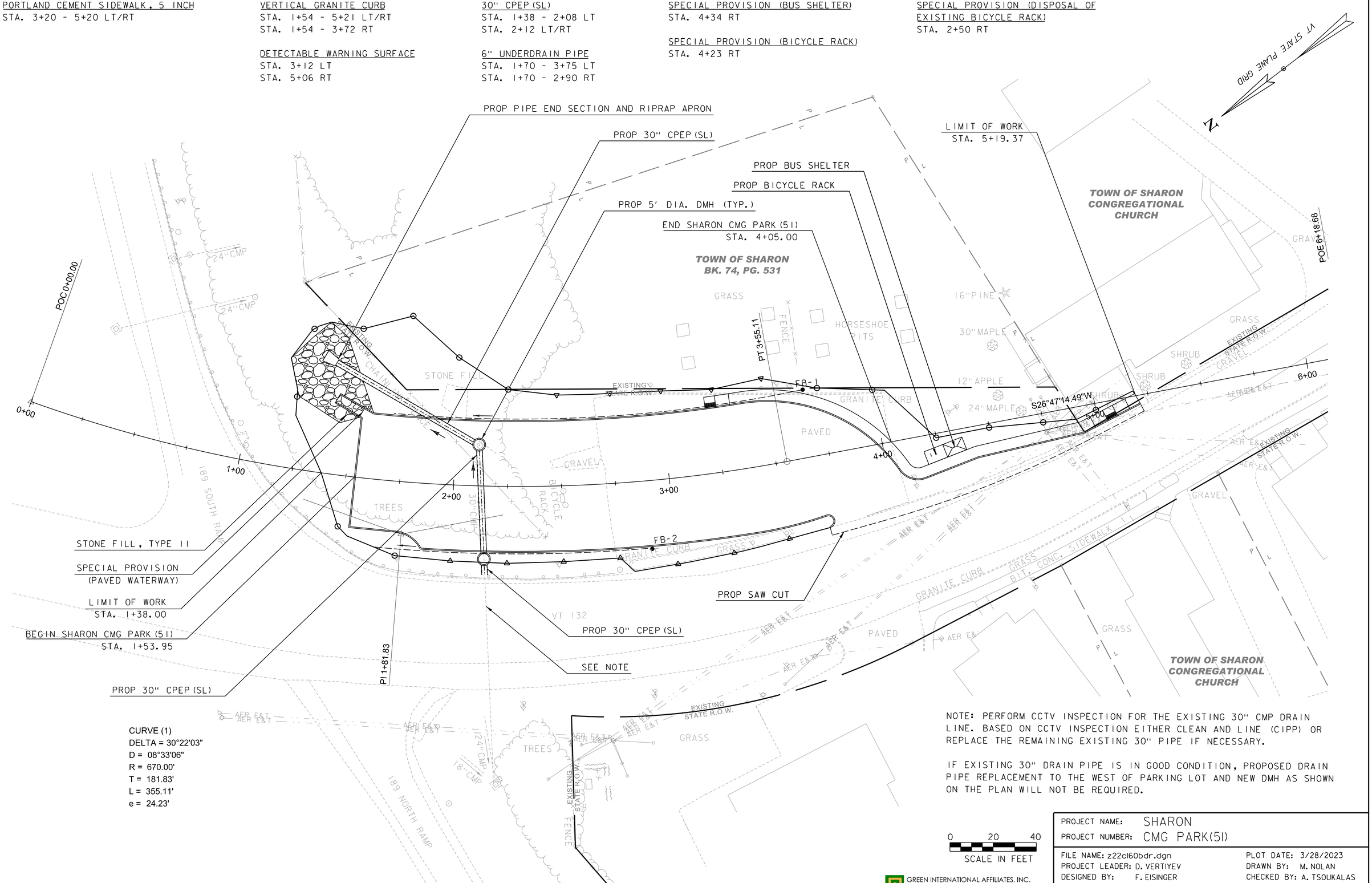

CURVE (1)
DELTA = 30°22'03"
D = 08°33'06"
R = 670.00'
T = 181.83'
L = 355.11'
e = 24.23'

NOTE: PERFORM CCTV INSPECTION FOR THE EXISTING 30" CMP DRAIN LINE. BASED ON CCTV INSPECTION EITHER CLEAN AND LINE (CIPP) OR REPLACE THE REMAINING EXISTING 30" PIPE IF NECESSARY.

IF EXISTING 30" DRAIN PIPE IS IN GOOD CONDITION, PROPOSED DRAIN PIPE REPLACEMENT TO THE WEST OF PARKING LOT AND NEW DMH AS SHOWN ON THE PLAN WILL NOT BE REQUIRED.

0 20 40
SCALE IN FEET

GREEN INTERNATIONAL AFFILIATES, INC.
CIVIL AND STRUCTURAL ENGINEERS

PROJECT NAME: SHARON	
PROJECT NUMBER: CMG PARK(51)	
FILE NAME: z22c160bdr.dgn	PLOT DATE: 3/28/2023
PROJECT LEADER: D. VERTIYEV	DRAWN BY: M. NOLAN
DESIGNED BY: F. EISINGER	CHECKED BY: A. TSOUKALAS
PLAN SHEET	SHEET 6 OF 15

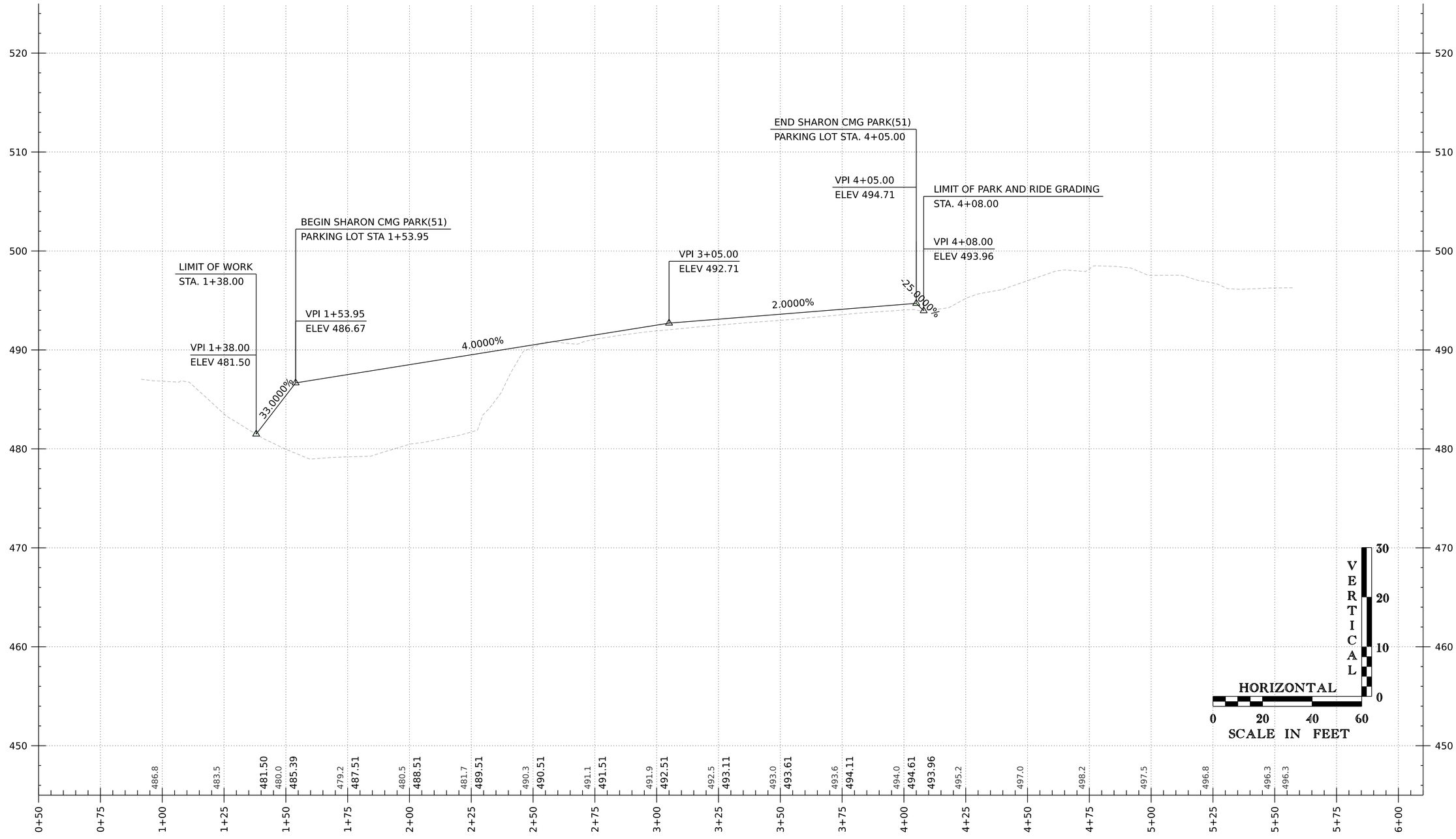

THE GRADES SHOWN TO THE NEAREST TENTH ARE THE ORIGINAL GROUND APPROXIMATE ELEVATIONS ALONG THE PROPOSED ALIGNMENT. THE GRADES SHOWN TO THE NEAREST HUNDREDTH ARE THE PROPOSED PROFILE GRADES FOR THE NEW ALIGNMENT.

NOTE:
1. ALL STATIONS AND ELEVATIONS ARE SHOWN IN FEET.

GREEN INTERNATIONAL AFFILIATES, INC.
CIVIL AND STRUCTURAL ENGINEERS

PROJECT NAME: SHARON	
PROJECT NUMBER: CMG PARK(51)	
FILE NAME: z22c160prof.dgn	PLOT DATE: 3/28/2023
PROJECT LEADER: D.VERTIYEV	DRAWN BY: F.EISINGER
DESIGNED BY: F.EISINGER	CHECKED BY: A.TSOUKALAS
PROFILE SHEET	SHEET 7 OF 15

REMOVING SIGNS
AS SHOWN - 5

RESETTING SIGNS
AS SHOWN - 23

DURABLE 4 INCH WHITE LINE (OPTION ITEMS)
STA. 1+84.6 LT - 3+37.1 LT (SOLID)
STA. 1+86.2 RT - 3+25.2 RT (SOLID)

DURABLE 24 INCH STOP BAR, PAINT
STA. 3+73 - 3+91 RT

DURABLE LETTER OR SYMBOL, PAINT
STA. 3+13.8 LT (ADA SYMBOL)
STA. 3+32.8 LT (ADA SYMBOL)

DURABLE CROSSWALK MARKING (OPTION ITEMS)
STA. 5+11.7 RT - 5+11.6 RT (SOLID)

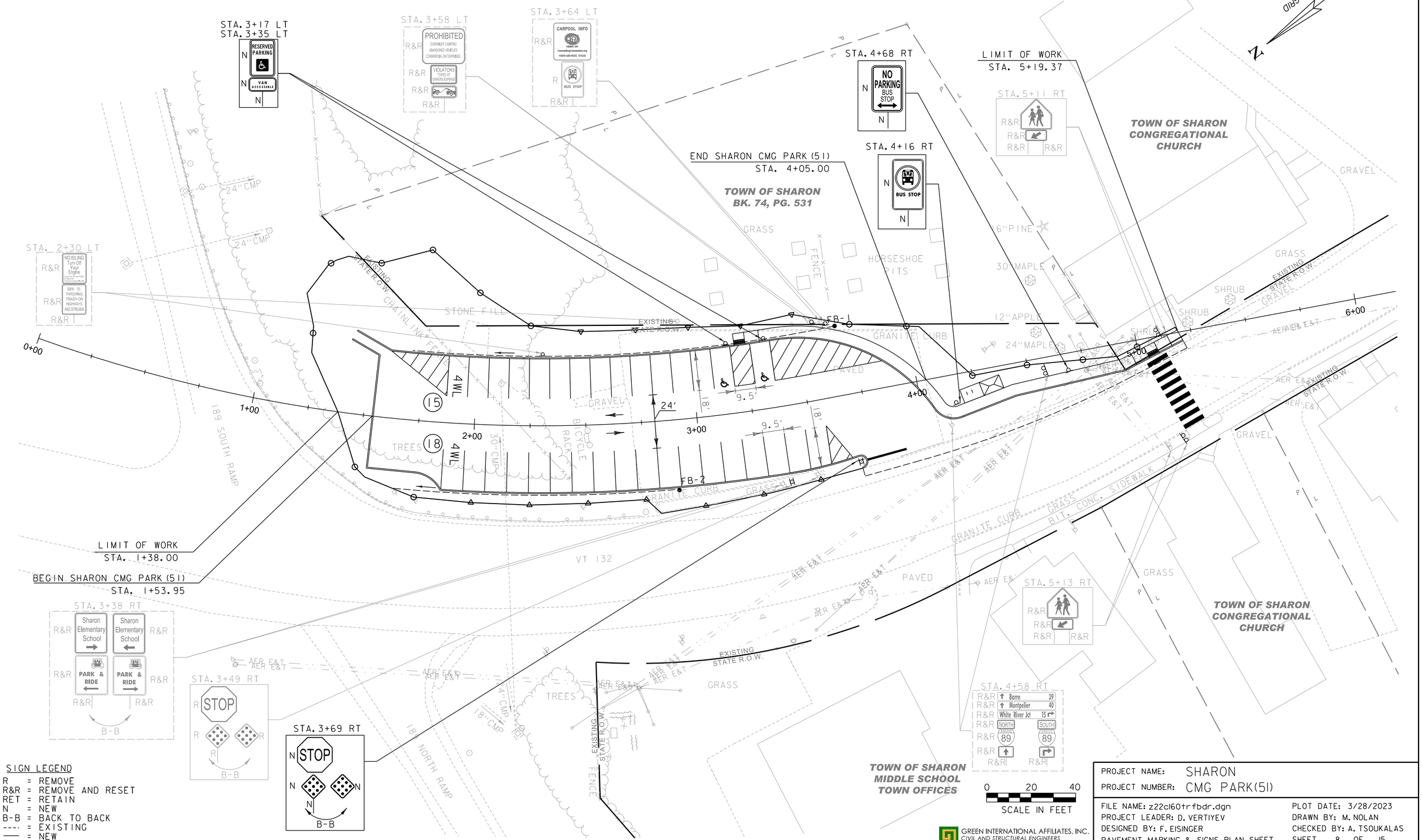

SIGN LEGEND
R = REMOVE
R&R = REMOVE AND RESET
RET = RETAIN
N = NEW
B-B = BACK TO BACK
---- = EXISTING
—— = NEW

GREEN INTERNATIONAL AFFILIATES, INC.
CIVIL AND STRUCTURAL ENGINEERS

PROJECT NAME: SHARON
PROJECT NUMBER: CMG PARK(51)

FILE NAME: z22c160trfbdr.dgn
PROJECT LEADER: D. VERTIYEV
DESIGNED BY: F. EISINGER
PAVEMENT MARKING & SIGNS PLAN SHEET

PLOT DATE: 3/28/2023
DRAWN BY: M. NOLAN
CHECKED BY: A. TSOUKALAS
SHEET 8 OF 15

STREET LIGHT ASSEMBLY
STA. 1+87 LT
STA. 2+62 LT
STA. 3+38 LT
STA. 4+04 RT

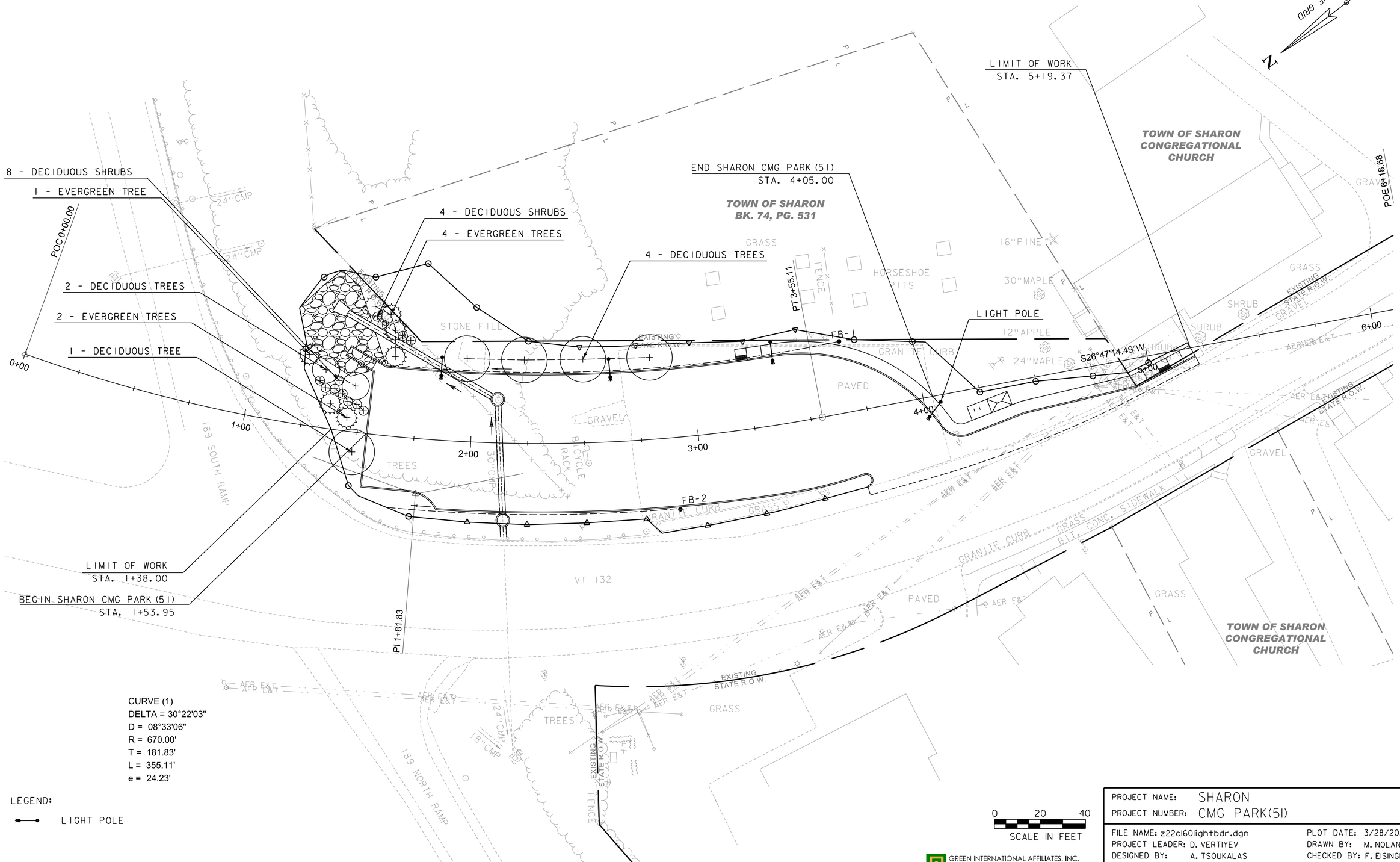

CURVE (1)
DELTA = 30°22'03"
D = 08°33'06"
R = 670.00'
T = 181.83'
L = 355.11'
e = 24.23'

LEGEND:

LIGHT POLE

0 20 40
SCALE IN FEET

GREEN INTERNATIONAL AFFILIATES, INC.
CIVIL AND STRUCTURAL ENGINEERS

PROJECT NAME: SHARON	
PROJECT NUMBER: CMG PARK(51)	
FILE NAME: z22cl60lightbdr.dgn	PLOT DATE: 3/28/2023
PROJECT LEADER: D. VERTIYEV	DRAWN BY: M. NOLAN
DESIGNED BY: A. TSOUKALAS	CHECKED BY: F. EISINGER
LIGHTING AND LANDSCAPE DESIGN SHEET	SHEET 9 OF 15

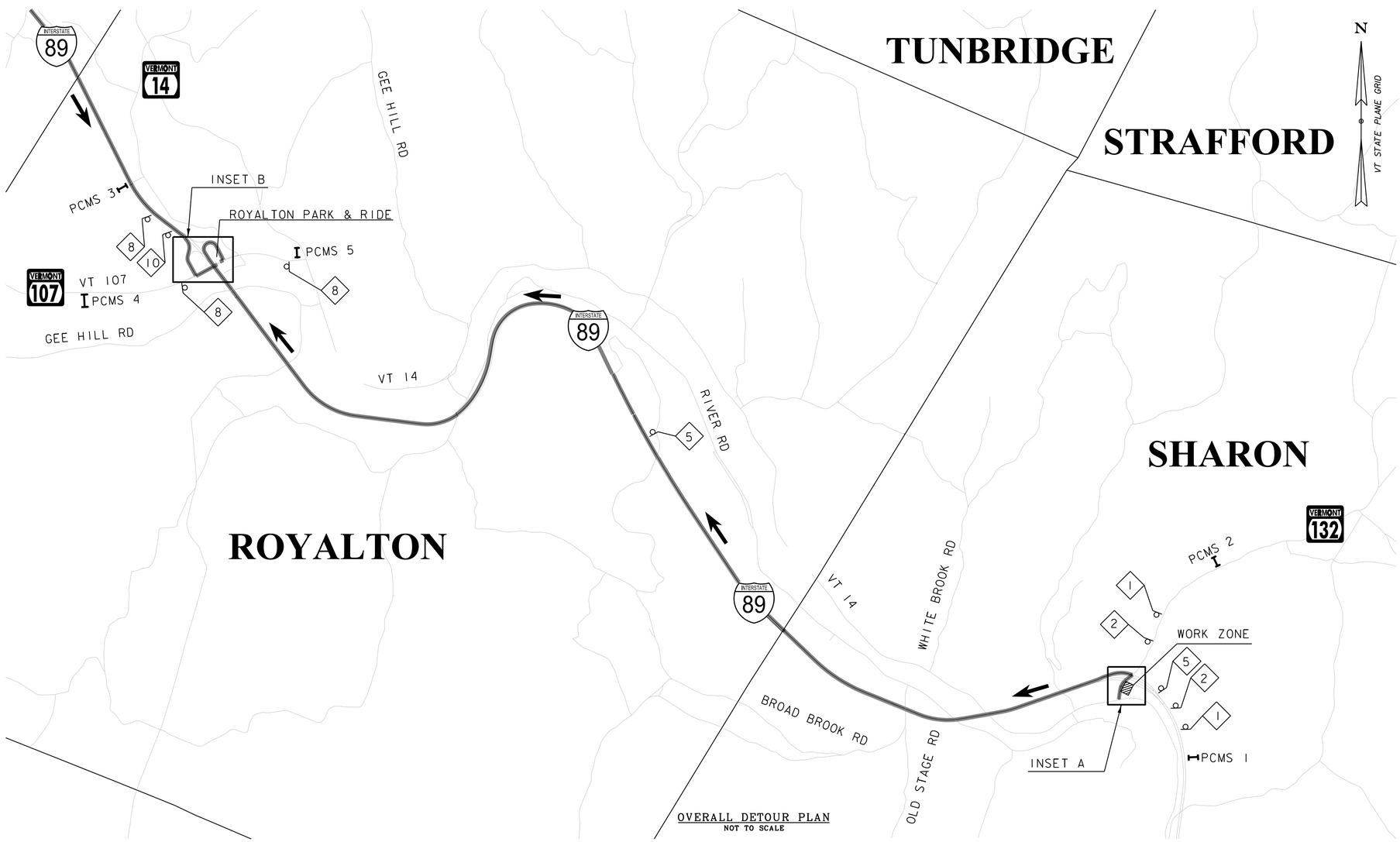

OVERALL DETOUR PLAN
NOT TO SCALE

PCMS 1 & 2

PCMS DISPLAY ADVANCED NOTIFCATION	PCMS DISPLAY DURING CONSTRUCTION
PRK-RIDE CLOSED MM/DD	PARK AND RIDE CLOSED
TAKE ROYALTON LOT	FOLLOW DETOUR

PCMS 3, 4 & 5

PCMS DISPLAY ADVANCED NOTIFCATION	PCMS DISPLAY DURING CONSTRUCTION
SHARON PRK-RIDE CLOSE	SHARON PRK-RIDE CLOSED
TAKE ROYALTON LOT	FOLLOW DETOUR

LEGEND:

- CONSTRUCTION SIGN ASSEMBLY I.D. NUMBER
- SIGN
- PORTABLE CHANGEABLE MESSAGE SIGN (PCMS)
- WORK ZONE

1	2	3	4	5	6	7	8	9	10
PARK & RIDE LOT CLOSED USE DETOUR	DETOUR AHEAD	DETOUR	DETOUR	DETOUR	DETOUR	DETOUR	DETOUR AHEAD	DETOUR	DETOUR
SP-2	W20-2	M4-8	M4-8	M4-8	M4-8	M4-8	W20-2	M4-8	M4-8
	PARK & RIDE EXIT 2	PARK & RIDE	PARK & RIDE	PARK & RIDE	PARK & RIDE	PARK & RIDE		PARK & RIDE	PARK & RIDE
	SP-3	SP-1	SP-1	SP-1	SP-1	SP-1		SP-1	SP-1
		M6-1L	M6-1R	M6-3	M5-1L	M5-1R		M6-2R	M5-2R

PROJECT NAME:	SHARON
PROJECT NUMBER:	CMG PARK(51)

FILE NAME: z22c160detour.dgn	PLOT DATE: 3/28/2023
PROJECT LEADER: D. VERTIYEV	DRAWN BY: J. GRIFFITHS
DESIGNED BY: H. GAO	CHECKED BY: H. GAO
OFFSITE PARKING PLAN SHEET	SHEET 10 OF 15

GREEN INTERNATIONAL AFFILIATES, INC.
CIVIL AND STRUCTURAL ENGINEERS

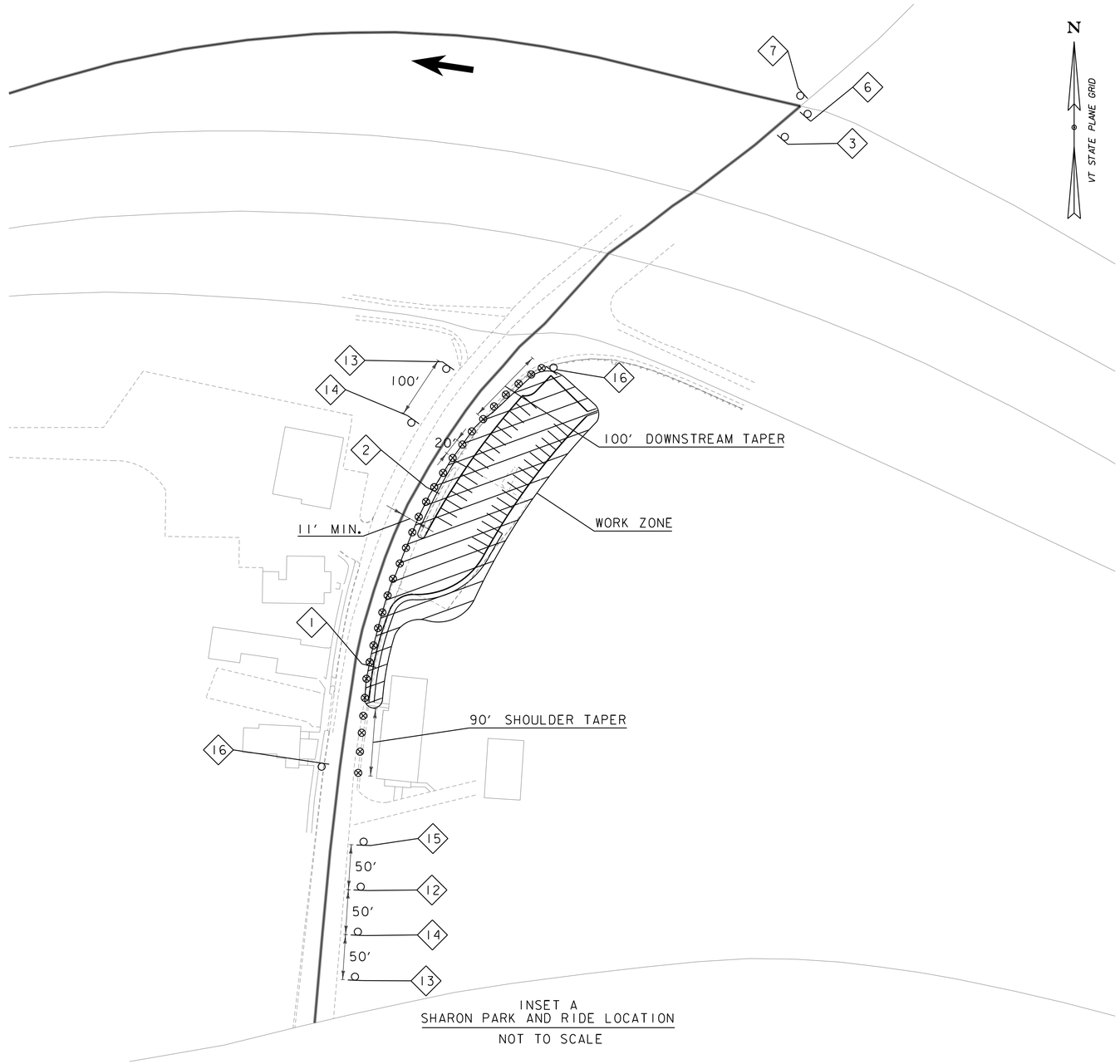

INSET A
SHARON PARK AND RIDE LOCATION
NOT TO SCALE

LEGEND:

- 1 — CONSTRUCTION SIGN ASSEMBLY I.D. NUMBER
- PORTABLE CHANGEABLE MESSAGE SIGN (PCMS)
- WORK ZONE
- SIGN
- REFLECTORIZED PLASTIC DRUM OR CONE

12 — ROAD NARROWS — W5-1

13 — ROAD WORK AHEAD — W20-1

14 — FINE DOUBLED FOR SPEEDING IN WORK ZONE — VR-355

15 — RIGHT SHOULDER CLOSED — W21-5A

16 — END ROAD WORK — G20-2

GREEN INTERNATIONAL AFFILIATES, INC.
CIVIL AND STRUCTURAL ENGINEERS

PROJECT NAME: SHARON	
PROJECT NUMBER: CMG PARK(51)	
FILE NAME: z22c160detour.dgn	PLOT DATE: 3/28/2023
PROJECT LEADER: D. VERTIYEV	DRAWN BY: J. GRIFFITHS
DESIGNED BY: H. GAO	CHECKED BY: H. GAO
DETOUR PLAN SHEET 1	SHEET 11 OF 15

LEGEND:

CONSTRUCTION SIGN ASSEMBLY I.D. NUMBER

SIGN

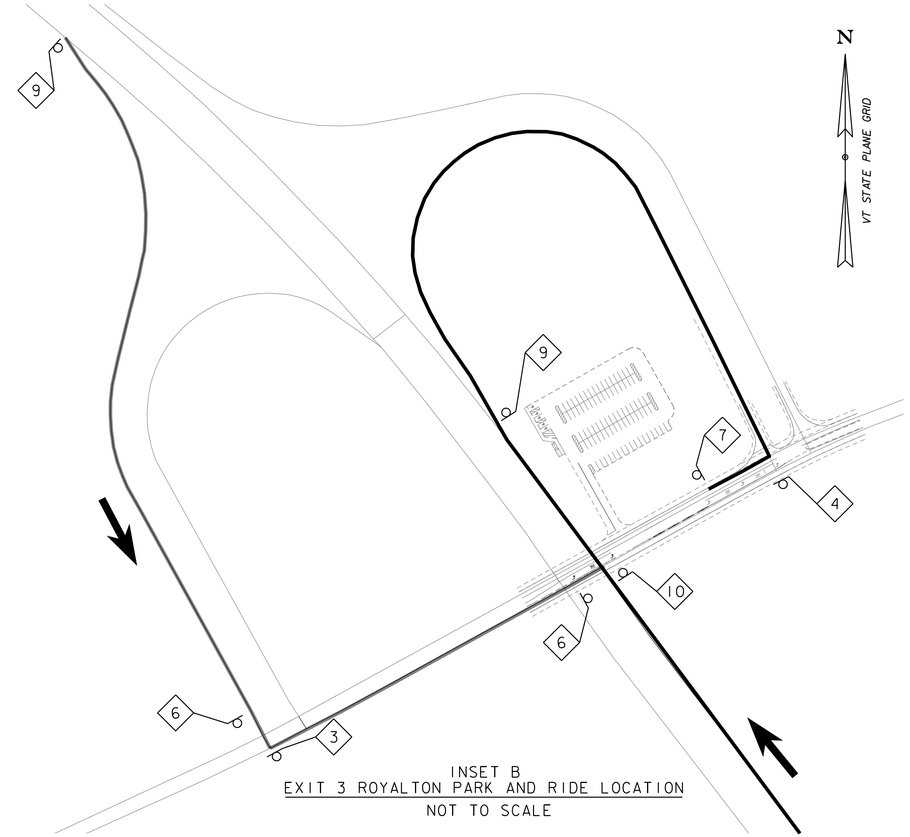

INSET B
EXIT 3 ROYALTON PARK AND RIDE LOCATION
NOT TO SCALE

DETOUR NOTES:

1. DETOUR SIGNING IS THE RESPONSIBILITY OF THE CONTRACTOR. PAYMENT FOR ALL TEMPORARY TRAFFIC DEVICES REQUIRED FOR IMPLEMENTING THE DETOUR, INCLUDING BUT NOT LIMITED TO SIGNS AND BARRICADES SHALL BE INCLUDED FOR PAYMENT UNDER ITEM 641.11 TRAFFIC CONTROL - ALL INCLUSIVE

2. CONTRACTOR SHALL REMOVE ALL TEMPORARY DETOUR SIGNS UPON RE-OPENING SHARON PARK AND RIDE TO TRAFFIC. WHILE THE TEMPORARY DETOUR SIGNS ARE BEING REMOVED, PCMS UNITS SHALL REMAIN IN PLACE AND BROADCAST THE POST CONSTRUCTION PCMS MESSAGE.

3. DETOUR SIGNS SHALL BE PLACED ADJACENT TO EXISTING ROUTE MARKER ASSEMBLIES, WHERE APPLICABLE.

4. ALL CONFLICTING SIGNAGE SHALL BE COVERED FOR THE DURATION OF SHARON PARK & RIDE CLOSURE, AS DIRECTED BY THE ENGINEER.

5. CONTRACTOR SHALL COORDINATE ALL WORK AND THE IMPLEMENTATION OF THE DETOUR WITH THE ENGINEER AND ALL OTHER CONSTRUCTION PROJECTS ALONG THE DETOUR ROUTE.

6. THE CONTRACTOR SHALL PROVIDE ACCESS THROUGH THE WORK ZONE FOR EMERGENCY VEHICLES AT ALL TIMES OR COORDINATE EMERGENCY ROUTES DURING ROADWAY CLOSURE.

7. THE 2009 MUTCD AND ITS LATEST REVISIONS SHALL BE THE STANDARD FOR ALL TRAFFIC CONTROL DEVICES. THE 2009 MUTCD AND ITS LATEST REVISIONS SHALL BE VALID UNTIL SUCH TIME AS THE TRAFFIC CONTROL DEVICES ARE REPLACED OR RECONSTRUCTED. WHEN NEW TRAFFIC CONTROL DEVICES ARE ERECTED OR PLACED, OR EXISTING TRAFFIC CONTROL DEVICES ARE REPLACED OR REPAIRED, THE EQUIPMENT, DESIGN, METHOD OF INSTALLATION, PLACEMENT OR REPAIR SHALL CONFORM WITH SUCH STANDARDS.

8. PORTABLE CHANGEABLE MESSAGE SIGNS (PCMS) SHALL BE PROVIDED FOR USE ALONG THIS PROJECT. THE PLACEMENT OF THESE UNITS AS WELL AS THE MESSAGE WILL BE APPROVED BY THE ENGINEER. THESE SIGNS WILL BE PAID FOR UNDER ITEM 641.15, PORTABLE CHANGEABLE MESSAGE SIGN. FOR THE DURATION OF THE PROJECT, THE CONTRACTOR SHALL POSITION A PCMS PRIOR TO THE BEGIN AND END PROJECT LIMITS WARNING MOTORISTS OF EXPECTED ROADWAY CONDITIONS. PCMS SHALL NOT REPLACE ANY OF THE SIGNING DETAILED IN THE MUTCD AND SHALL NOT BE USED IF STANDARD TRAFFIC CONTROL DEVICES ADEQUATELY PROVIDE THE INFORMATION THE MOTORISTS NEED TO TRAVEL SAFELY. THE PCMS SHALL CONSIST OF EITHER ONE OR TWO MESSAGE PHASES. TYPICALLY, A PHASE SHALL CONSIST OFUP TO THREE LINES OF EIGHT CHARACTERS PER LINE. THE PCMS SHALL BE USED AS A SUPPLEMENT, AND NOT AS A SUBSTITUTE FOR CONVENTIONAL SIGNS AND PAVEMENT MARKINGS. THE PCMS SHALL COMMUNICATE WHAT INFORMATION MOTORISTS NEED TO KNOW. UNNECESSARY INFORMATION SHALL BE AVOIDED. MESSAGES SHALL BE UPDATED PERIODICALLY TO DESCRIBE THE WORK ACTIVITY OCCURRING SO THAT THE PCMS CONTINUES TO COMMAND THE ATTENTION OF MOTORISTS.

9. REFER TO VERMONT AGENCY OF TRANSPORTATION STANDARDS AND THE LATEST EDITION OF MUTCD FOR TEMPORARY TRAFFIC CONTROL SIGN COLORS.

GREEN INTERNATIONAL AFFILIATES, INC.
CIVIL AND STRUCTURAL ENGINEERS

PROJECT NAME: SHARON	
PROJECT NUMBER: CMG PARK(51)	
FILE NAME: z22cl60detour.dgn	PLOT DATE: 3/28/2023
PROJECT LEADER: D. VERTIYEV	DRAWN BY: J. GRIFFITHS
DESIGNED BY: H. GAO	CHECKED BY: H. GAO
DETOUR PLAN SHEET 2	SHEET 12 OF 15

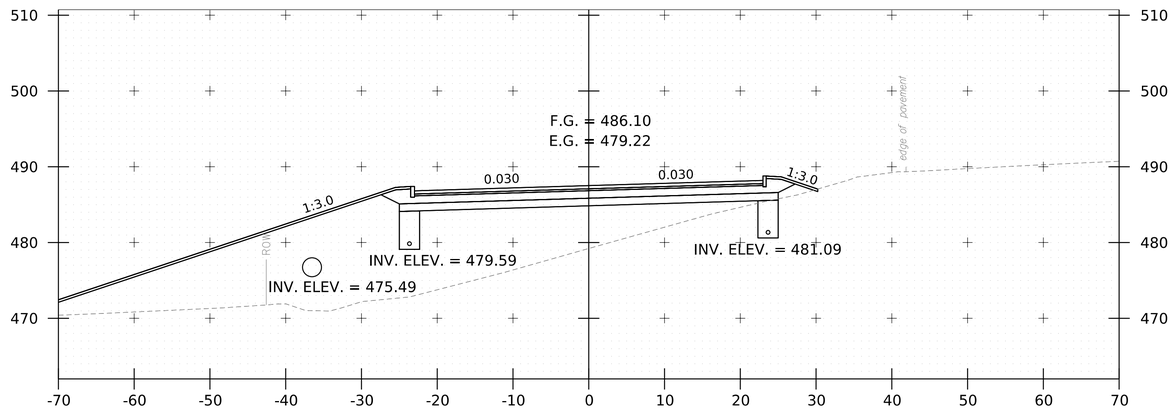

1+75

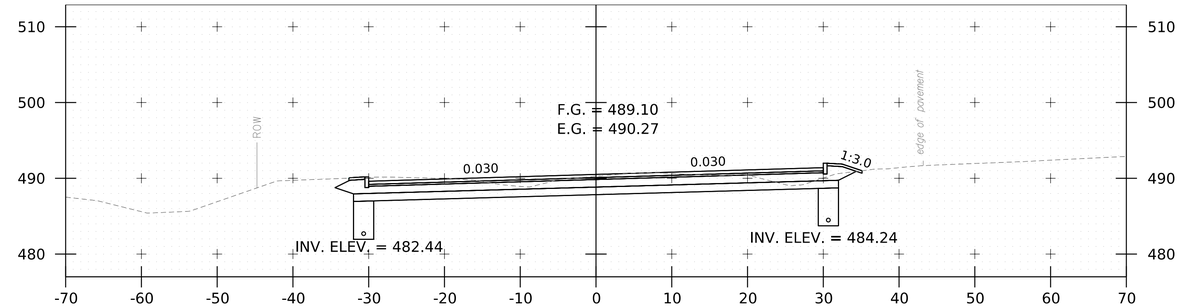

2+50

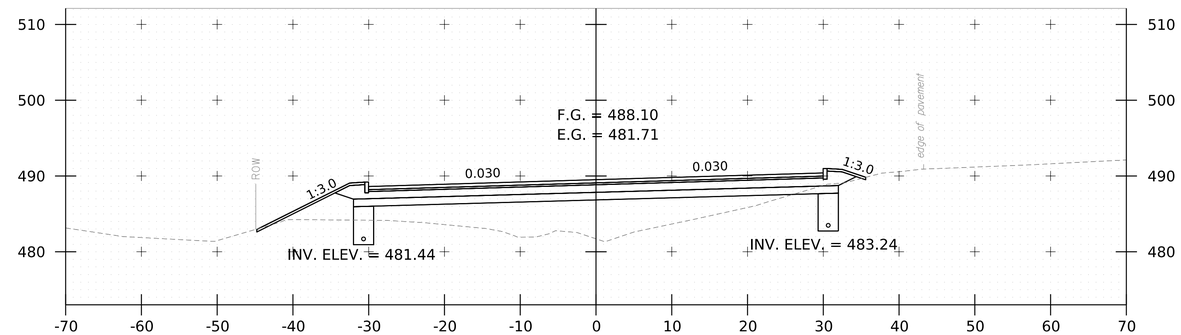

2+25

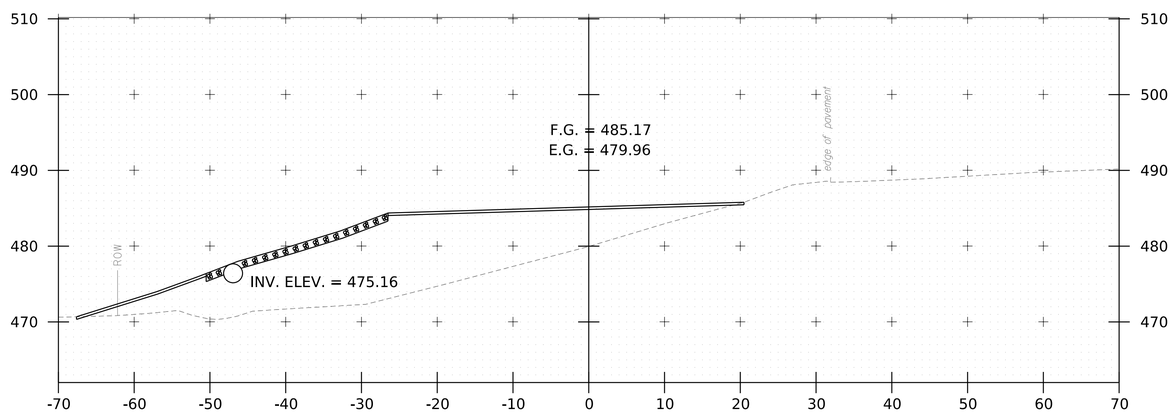

1+50

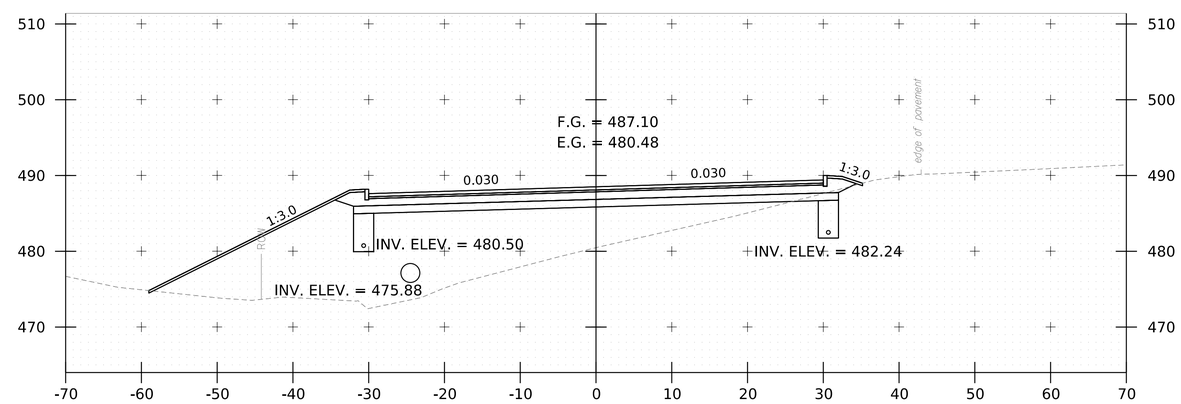

2+00

PROJECT NAME: SHARON	
PROJECT NUMBER: CMG PARK(51)	
FILE NAME: z22cl60xs.dgn	PLOT DATE: 3/28/2023
PROJECT LEADER: D.VERTIYEV	DRAWN BY: F.EISINGER
DESIGNED BY: F.EISINGER	CHECKED BY: A.TSOUKALAS
CROSS SECTION SHEET 1	SHEET 13 OF 15

GREEN INTERNATIONAL AFFILIATES, INC.
CIVIL AND STRUCTURAL ENGINEERS

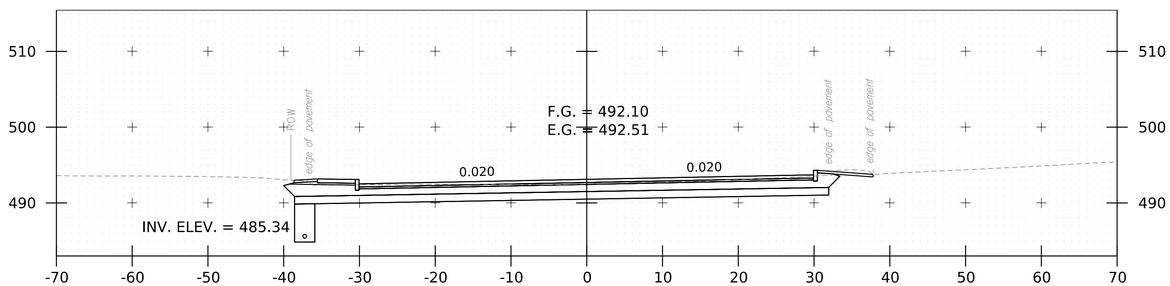

3+25

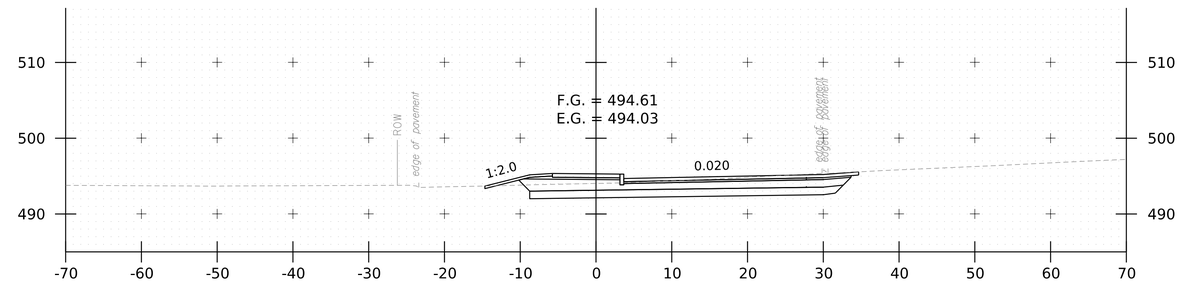

4+00

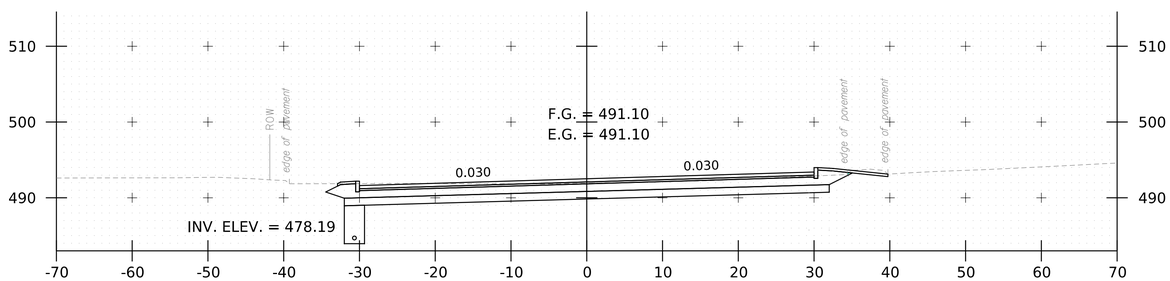

3+00

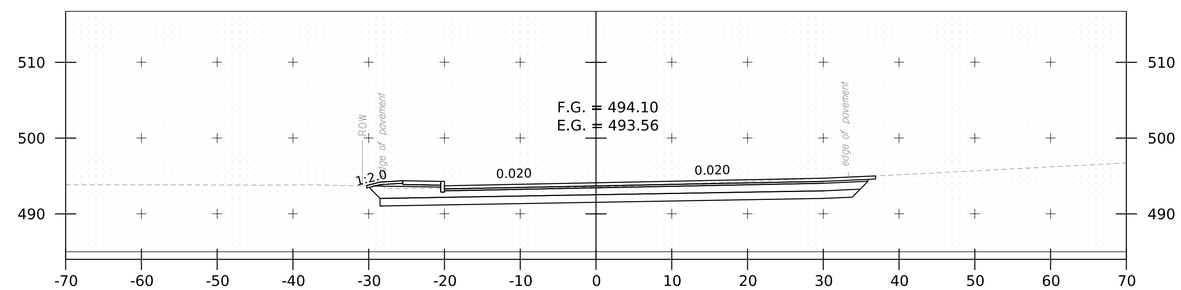

3+75

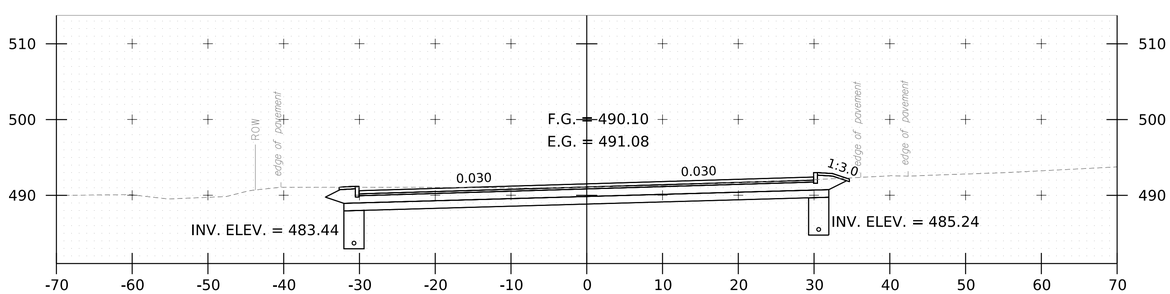

2+75

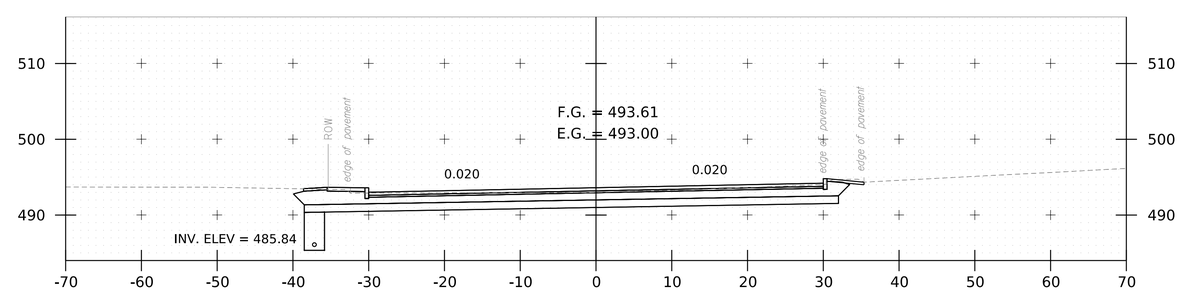

3+50

PROJECT NAME: SHARON	
PROJECT NUMBER: CMG PARK(51)	
FILE NAME: z22cl60xs.dgn	PLOT DATE: 3/28/2023
PROJECT LEADER: D.VERTIYEV	DRAWN BY: F.EISINGER
DESIGNED BY: F.EISINGER	CHECKED BY: A.TSOUKALAS
CROSS SECTION SHEET 2	SHEET 14 OF 15

GREEN INTERNATIONAL AFFILIATES, INC.
CIVIL AND STRUCTURAL ENGINEERS

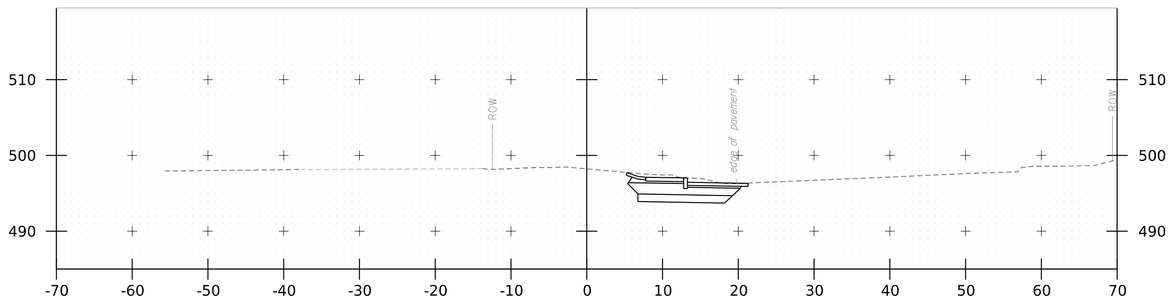

4+75

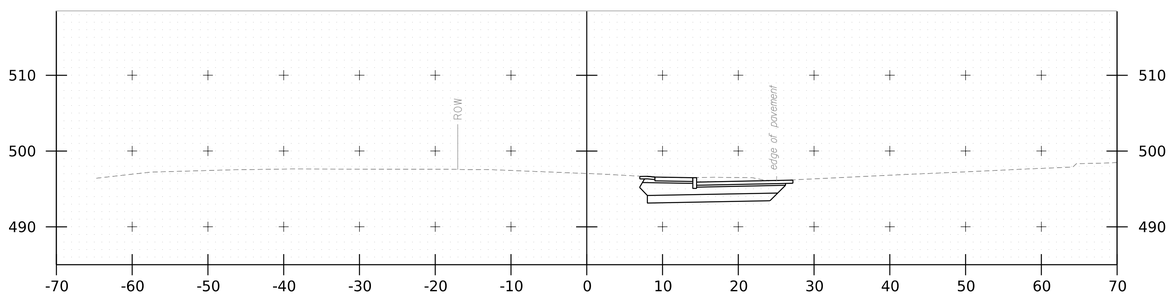

4+50

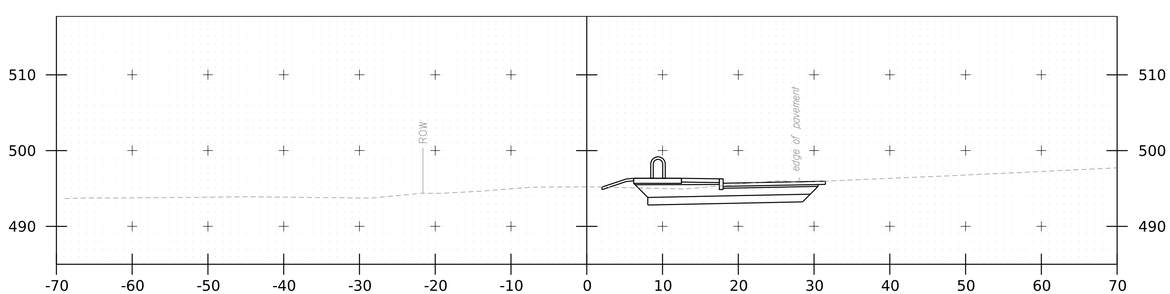

4+25

PROJECT NAME: SHARON	
PROJECT NUMBER: CMG PARK(51)	
FILE NAME: z22cl60xs.dgn	PLOT DATE: 3/28/2023
PROJECT LEADER: D.VERTIYEV	DRAWN BY: F.EISINGER
DESIGNED BY: F.EISINGER	CHECKED BY: A.TSOUKALAS
CROSS SECTION SHEET 3	SHEET 15 OF 15

GREEN INTERNATIONAL AFFILIATES, INC.
CIVIL AND STRUCTURAL ENGINEERS